KHATOD®
OPTOELECTRONIC

TECHNICAL DEPT.
Lenses Test Report

Via Monfalcone 41
20092 Cinisello Balsamo (Milano) – Italy
Tel. +39 0266013695 – Fax +39 0266013500

MODEL NO: PL121440

SUBJECT: **Philips Lumileds LUXEON® Rebel LEDs – Lens Coupling - Output Luminous Intensity Measurement**

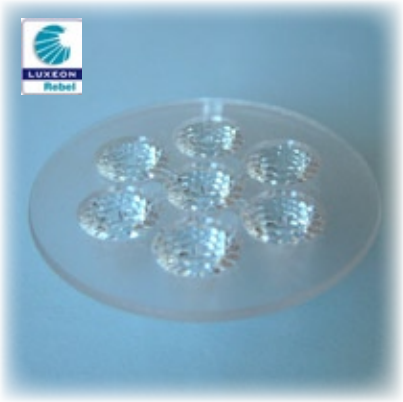

PL121440

- NJC Technology
- High efficiency
- Standard MR16

Typical applications are

- Wall Washing
- Architectural lighting
- Lamps
- Pubblic

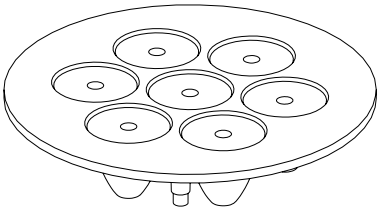

DESCRIPTION:

The luminous intensity test has been carried out by coupling Khatod Lenses with LUXEON® Rebel LED: LXML-PWN1-0070.

REPORT:

The luminous intensity emitted by LUXEON® Rebel LED has been measured at 1 m ± 0,02 distance.
These measurements have been repeated under the same test conditions by coupling Rebel® LEDs with Khatod Lenses PL121440.

MEASURED DATA:

Column 1 shows the Lens P/N - Column 2 shows the Luminous Intensity detected by measuring the LEDs without the Lens - Column 3 shows the Luminous Intensity detected by measuring the LEDs coupled with the Lens. - Column 4 shows the difference (X*) between col. 2 and col. 3

Lens Type	LED Lux from 1 Mt (ftc From 1 Mt)	LED + lens Lux from 1Mt (ftc From 1 Mt)	X*
PL121440 (30°)	153 (14,12 ftc)	623 (57,50 ftc)	4
Test carried out after 5 min. of operation of the LED to: 350 mA ~ , local power source **GOSSEN KONSTANTER** mod 3226-K118 Measurements carried out by using Luxometer mod LUX-1337 of **ISO-TEC** and **MINOLTA** mod LS – 150 * X is the value of the LED brightness measurement at 1 meter distance, without optic devices applied to the LED.			

LUXEON® is a registred trademark of Philips Lumileds Company, LLC

White LED Illuminance Chart

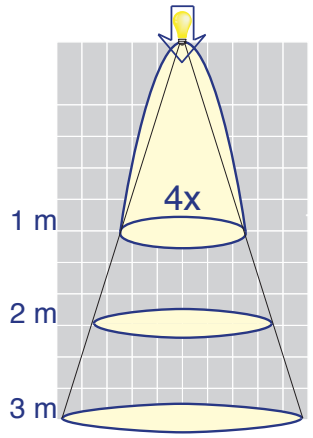

PL121440 (30°) - 1 METER

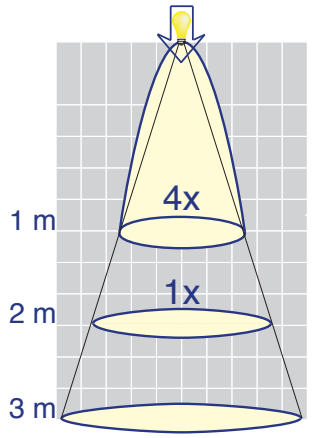

PL121440 (30°) - 2 METER

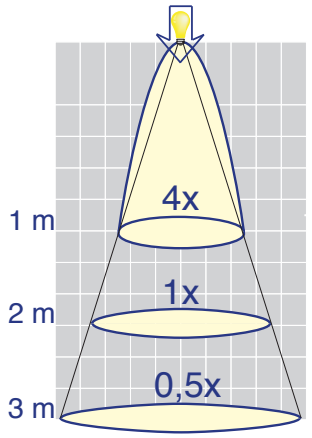

PL121440 (30°) - 3 METER

* X is the value of the LEDs brightness measurement at 1 meter distance, without optic devices applied to the LED.

Test conditions:

Test current: Test current: 350 mA
Room Luminous Intensity :0 Lumen
Room Temperature: 23,2° C
LED temperature after 10 min. : ~ 46 °C

The diagram shows the performance of Khatod lenses

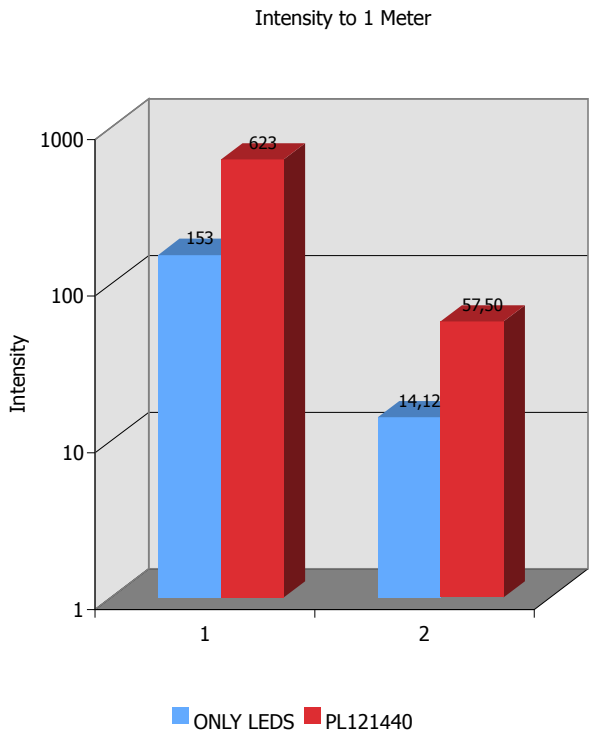

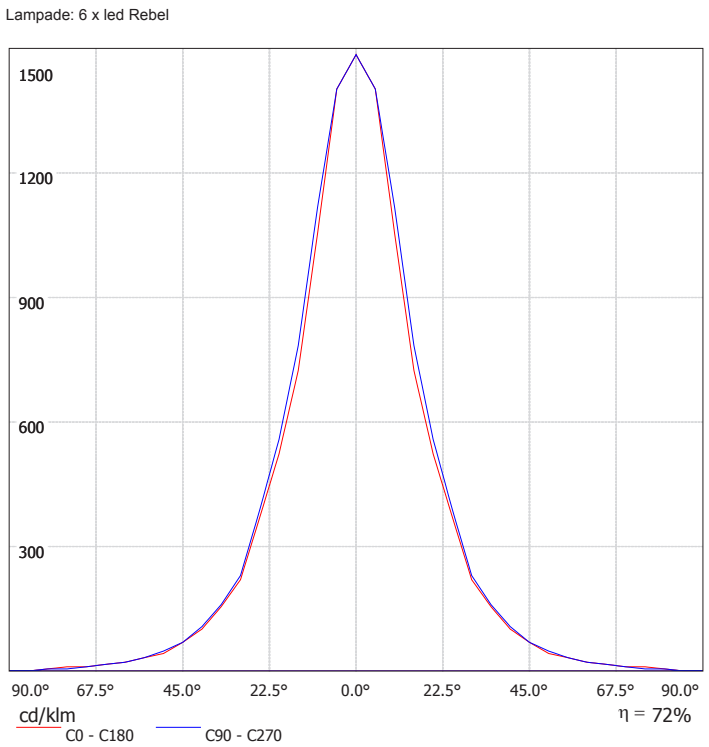

LUXEON® is a registred trademark of Philips Lumileds Company, LLC

Photos:

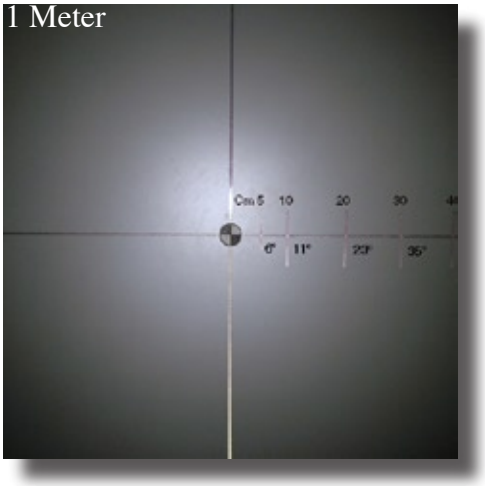

PL121440 (30°)

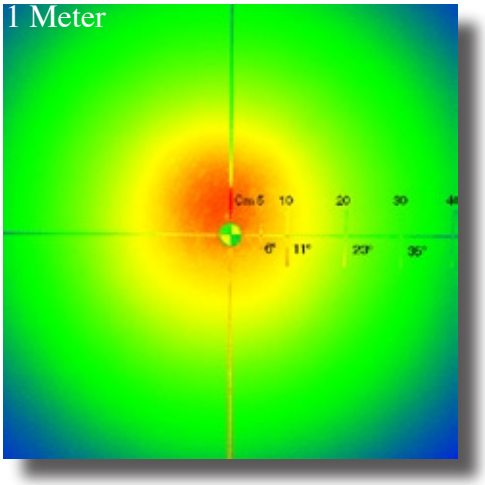

PL121440 (30°)
Spectro Metric Analysis Photo

Measurements carried out by using Luxometer mod LUX-1337. Room Luminous Intensity: 0 Lumen. Camera mod. Fujifilm S7000

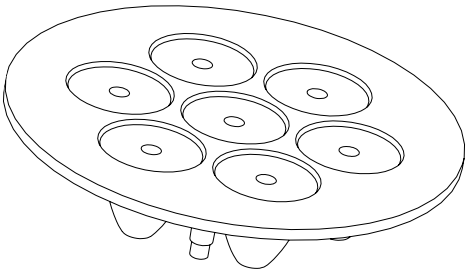

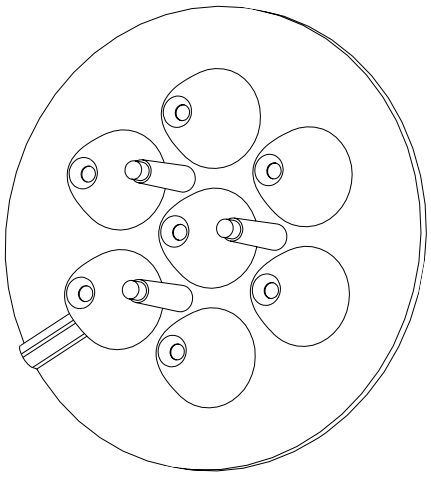

LUXEON® is a registred trademark of Philips Lumileds Company, LLC

Drawing.

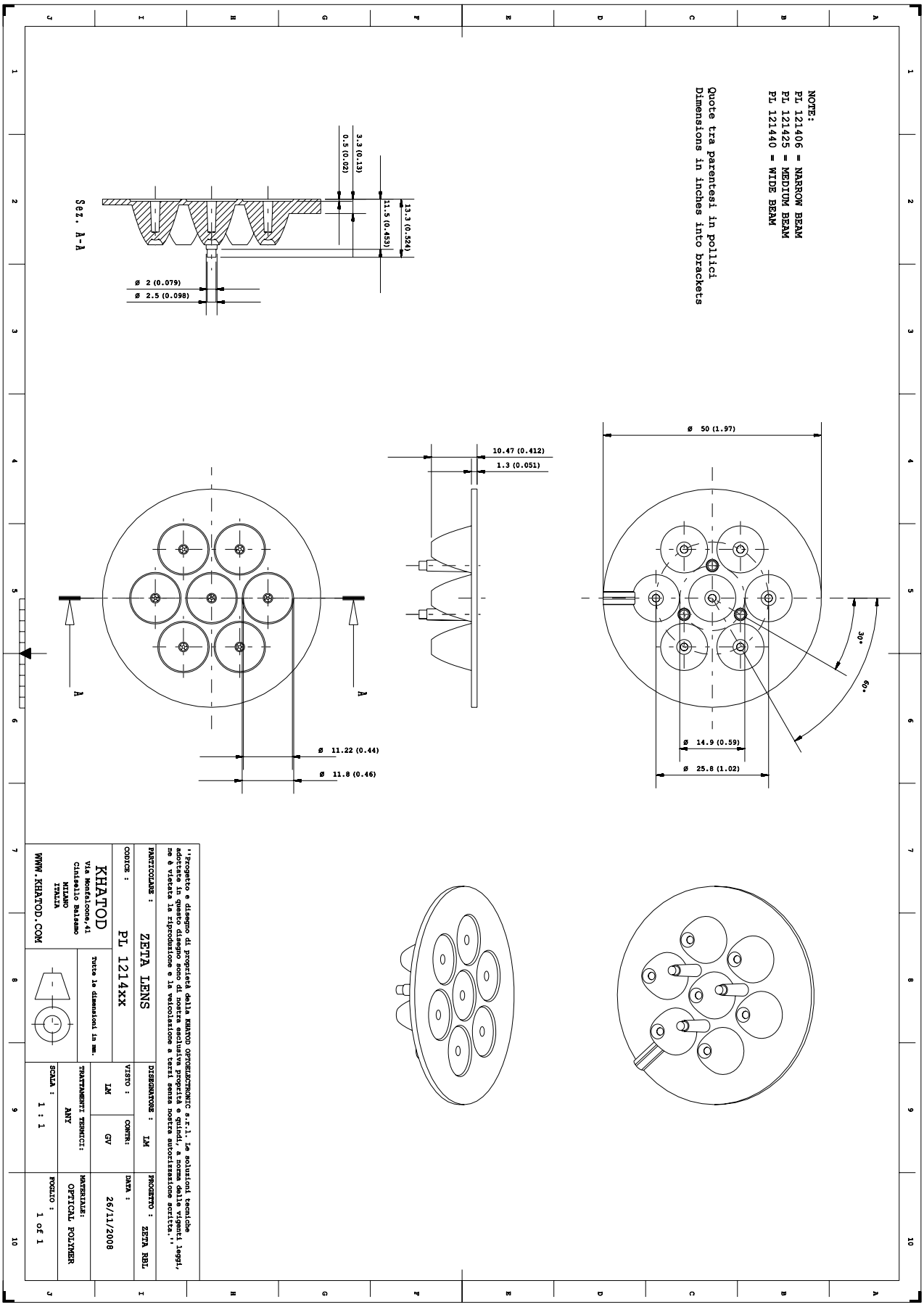

LUXEON® is a registred trademark of Philips Lumileds Company, LLC

Lens characteristics

Parameter	Symbol	Rating	Unit
Lens Material	PC Optics	--	--
Holder Material	--	--	--
Operating Temperature	Topr	-40 to +120	°C
Storage Temperature	Tstg	-40 to +120	°C
Average transmittance in visible spectrum (400 – 700nm) >90% as measured using 3mm thick Optical Grade PC			

LED characteristics

For technical specification on LEDs, please refer to LUXEON® LEDs *datasheet or visit www.luxeon.com*

Notes:

Please note that flow lines and weld lines on the external surfaces of the lenses are acceptable if the optical performance of the lens is within the specification described in the section "OPTICAL CHARACTERISTICS"

– Should you require further information, please contact Khatod for advice.
– All lens testing must be subject to identical conditions as Khatod test condition.
– Published by Khatod optoelectronic srl - All the data contained in this document are the proprety of Khatod optoelectronic srl and may change without notice.

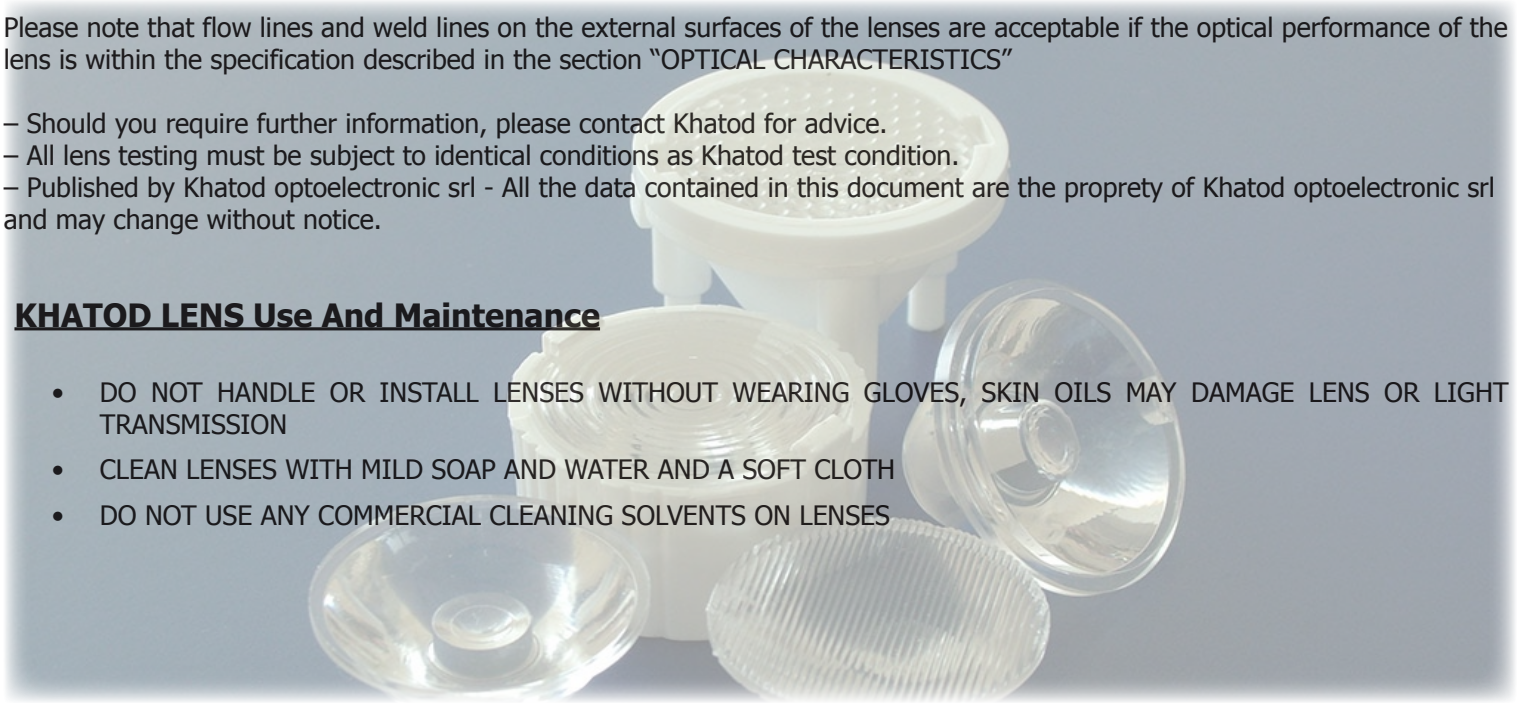

KHATOD LENS Use And Maintenance

- DO NOT HANDLE OR INSTALL LENSES WITHOUT WEARING GLOVES, SKIN OILS MAY DAMAGE LENS OR LIGHT TRANSMISSION
- CLEAN LENSES WITH MILD SOAP AND WATER AND A SOFT CLOTH
- DO NOT USE ANY COMMERCIAL CLEANING SOLVENTS ON LENSES

Khatod SRL, Milan, Italy, manufactures lenses for LEDs. Any other use of the lens shall void our liability and warranty. The lenses are an inert component to be used in the manufacture of various products. Our warranty and liability are limited only to the manufacture of the lens. You may not modify, copy, distribute reproduce, license or alter the lens and related materials of Khatod SRL. Khatod SRL does not warrant against damages or defects arising out of the use or misuse of the products; against defects or damage arising from improper installation, or against defects in the product or in its components. No warranty of any kind, expressed or implied, is made regarding the safety of the products. The entire risk as to the quality or performance of the product is with the buyer. In no event shall Khatod SRL or Khatod USA be liable for any direct, indirect, punitive, incidental, special, consequential damages, or any damages whatsoever arising out of or connected with the use or misuse of the product. Khatod SRL shall not have any obligation with respect to the product or any part thereof, whether based on contract, tort, strict liability or otherwise. Buyer assumes all risks and liability from use of the product. The laws of Milan, Italy govern this product warranty and liability and you hereby consent to the exclusive jurisdiction and venue of courts in Milan, Italy in all disputes arising out of or relating to the use of this product.

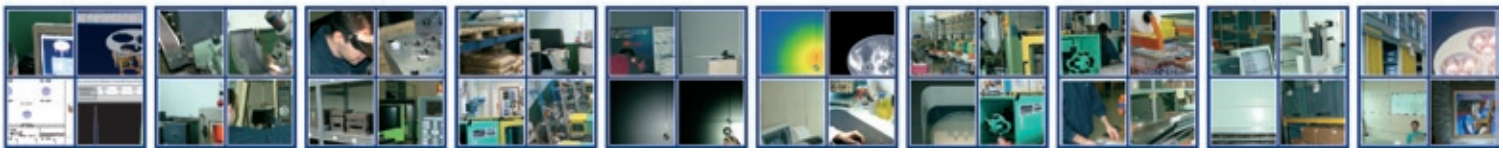

LUXEON® is a registred trademark of Philips Lumileds Company, LLC