KHATOD®
OPTOELECTRONIC

TECHNICAL DEPT.
Lenses Test Report

Via Monfalcone 41
20092 Cinisello Balsamo (Milano) – Italy
Tel. +39 0266013695 – Fax +39 0266013500

CODE NUMBER: 110000000036

SUBJECT: **Secondary Optics for Power LEDs - PL126525**
Lens Coupling - Output Luminous Intensity Measurement

- **Typ. Illuminance@1m ~ 1068 lux***
- High lighting efficiency
- Excellent luminous flux
- No vibration problems
- NJC Technology
- Superior optical engineering for a perfect uniform light distribution
- Innovative design
- Easy fixing system to the PCB
- Complying with UL94 Specifications

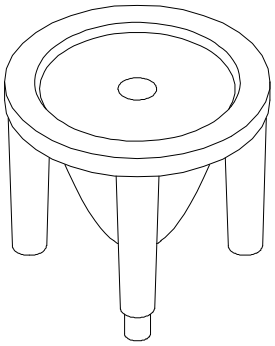

Typical Application are:

- Wall Washing
- Architectural lighting
- Lamps
- Most applications where a compact light source is required
- Any application requiring placement of LEDs in narrow or recessed spaces, as well as in diverse LED configurations

Khatod Optics are a basic element to make your optical design real.
The right optical solution is fundamental for type and number of LEDs used in your design.
Advanced research, scientific rigour, great attention to the continuous evolution in LED Technology, have led Khatod to develop optical solutions performing an excellent, homogeneous luminous flux, and a high lighting efficiency.
The product we are proposing, is the result of Khatod's superior engineering. It helps in reducing the costs while meeting the most demanding lighting specifications and applications.

Contents:

Technical Data	- Page 1
Polar Intensity Plot	- Page 2
Luminous Intensity Graphics	- Page 3
Technical Drawing	- Page 4
Photographic reproduction of the Spot	- Page 5
Luminous Distribution Intensity Data	- Annex A
General Lens Features	- Annex B
General Notes	- Annex B

* Measurement Carried out With LED Driven @ 1000 mA

KHATOD® OPTOELECTRONIC

TECHNICAL DEPT.
Lens Test Report

Via Monfalcone 41
200092 Cinisello Balsamo (Milano) - Italy
Tel. 0266013695 - Fax. +39 0266013500

CODE NUMBER: 110000000036

Goniophotometer Type	KLX12M	Operator	SIMONE BASSI
Power Supply Type	ISO TECH ISP3303	Date	02/02/2011
LED Driver Type	////		

Lamp Model	////	Nominal Flux (lm)	130	Angle FWHM C Plane	20
Lens Model	PL126525	Total Flux (lm)	130	Angle FWHM γ Plane	18
LED Model	REBEL ES	Imax (cd)	445		
N. LED	1	Max Ill.@ Meas. Dist. (lux)	17.6	Total Incl. Angle C Plane	47
Rated Voltage (V)	2.9	Measurement Distance (m)	5	Total Incl. Angle γ Plane	45
LED Drive Current (mA)	350	Room Temperature (°C)	25		

Notes:

General Optical Measurement Tolerance: +/-10%

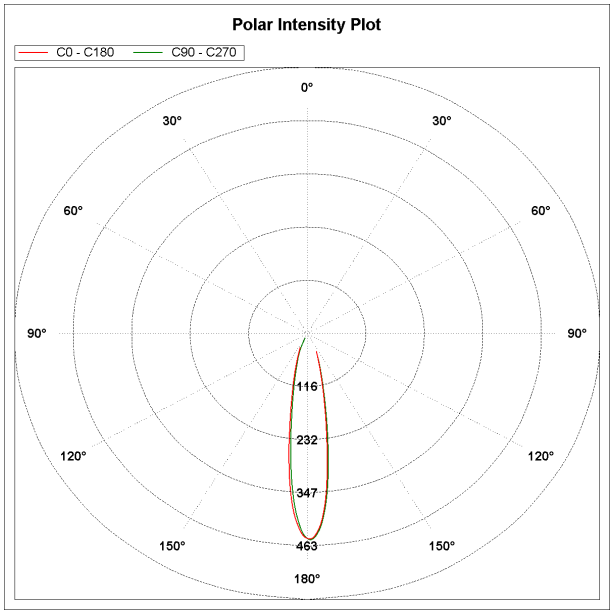

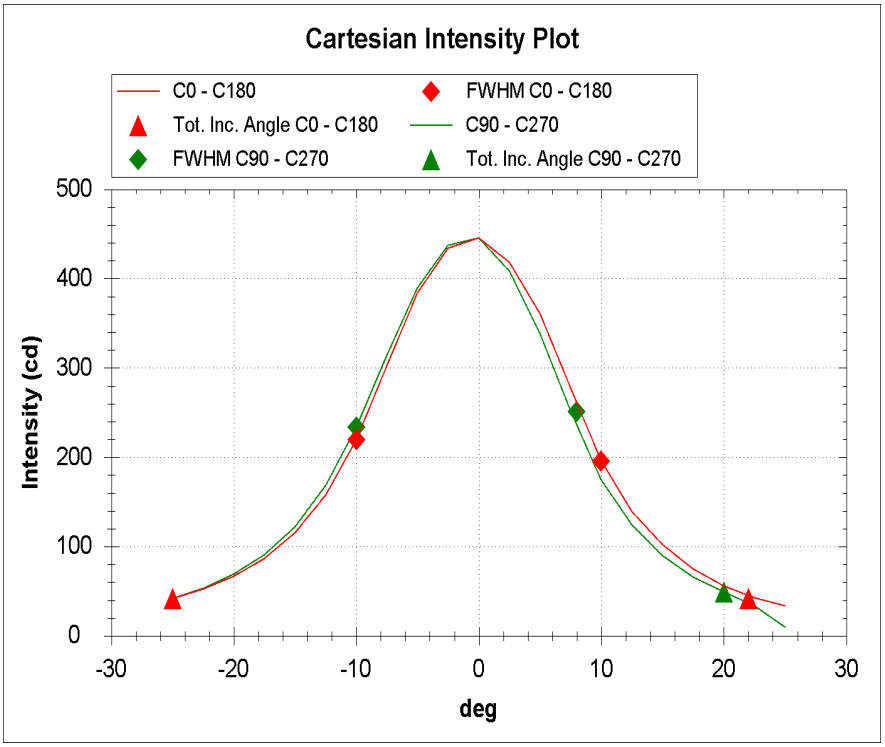

KHATOD®
OPTOELECTRONIC

CODE NUMBER: 110000000036

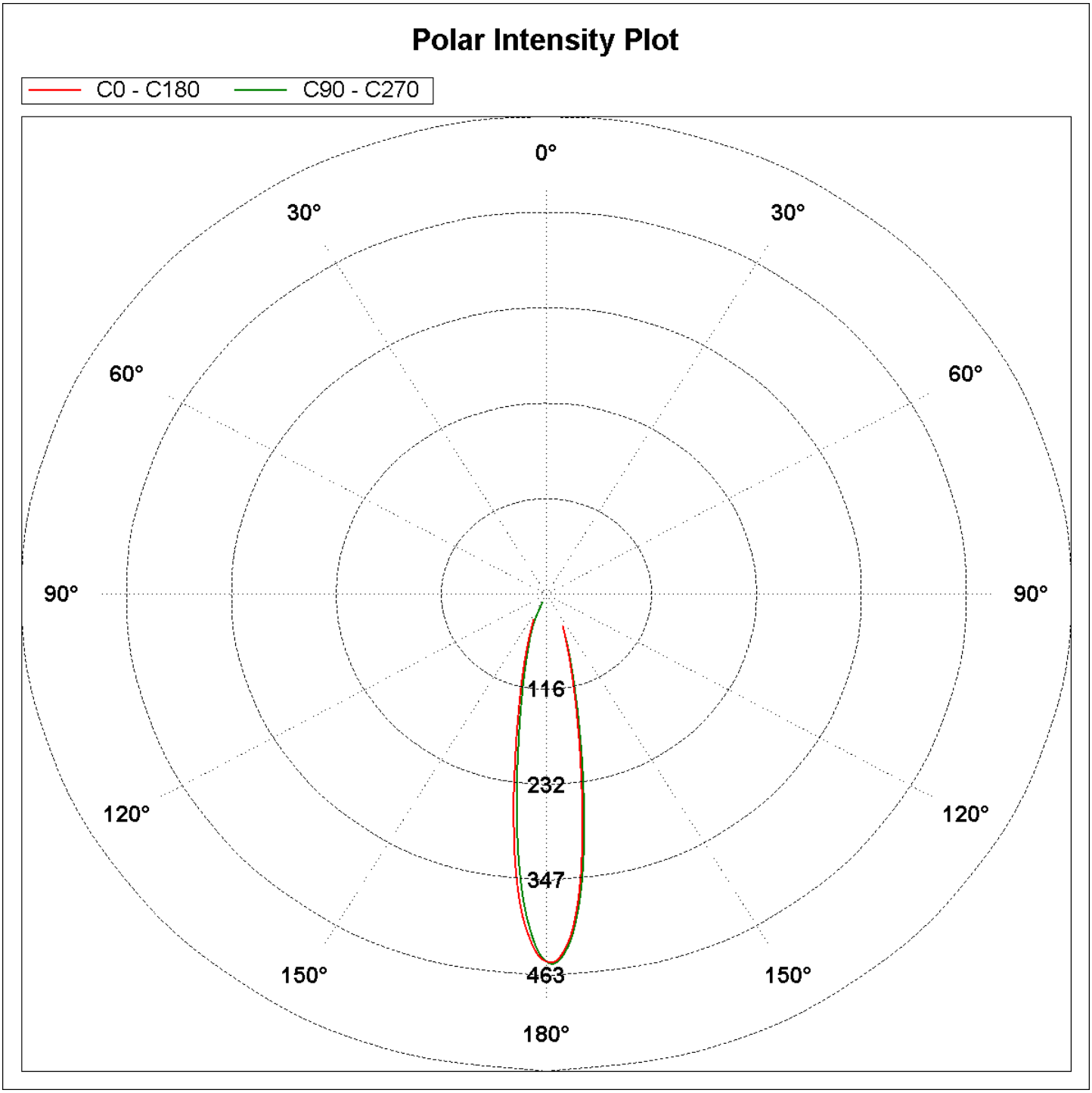

KHATOD®
OPTOELECTRONIC

CODE NUMBER: 110000000036

Figure C0-C180

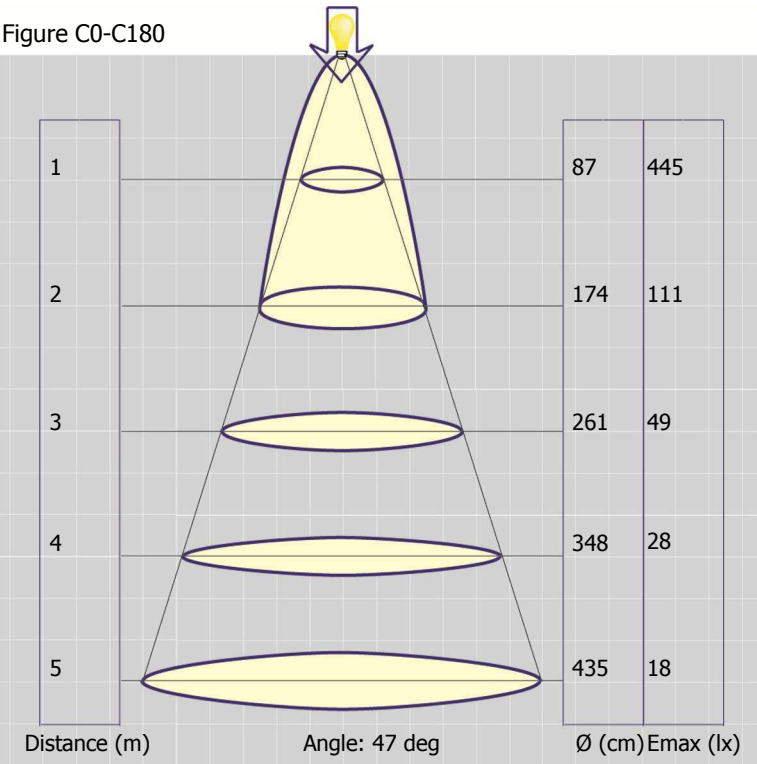

Figure C90-C270

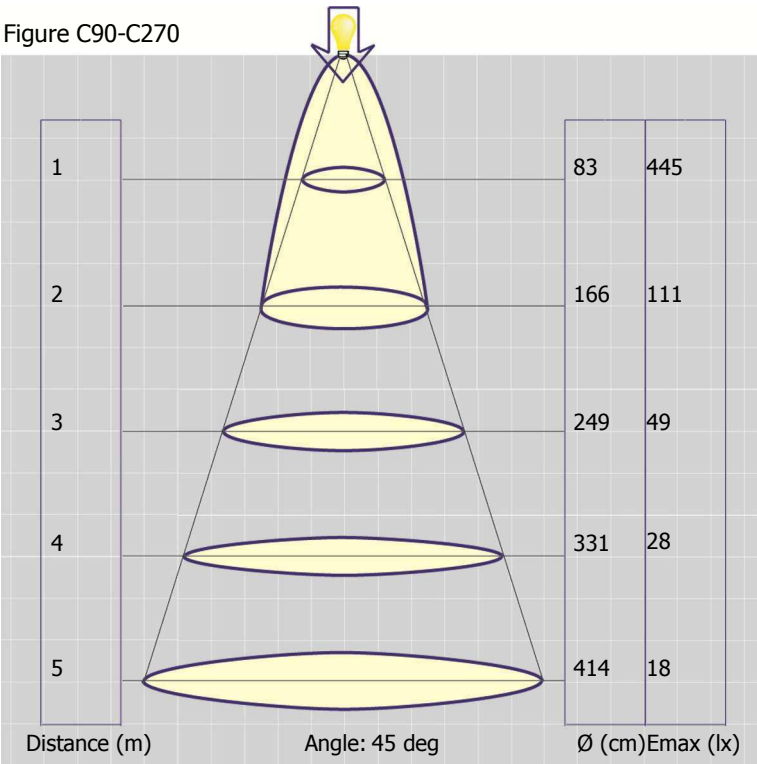

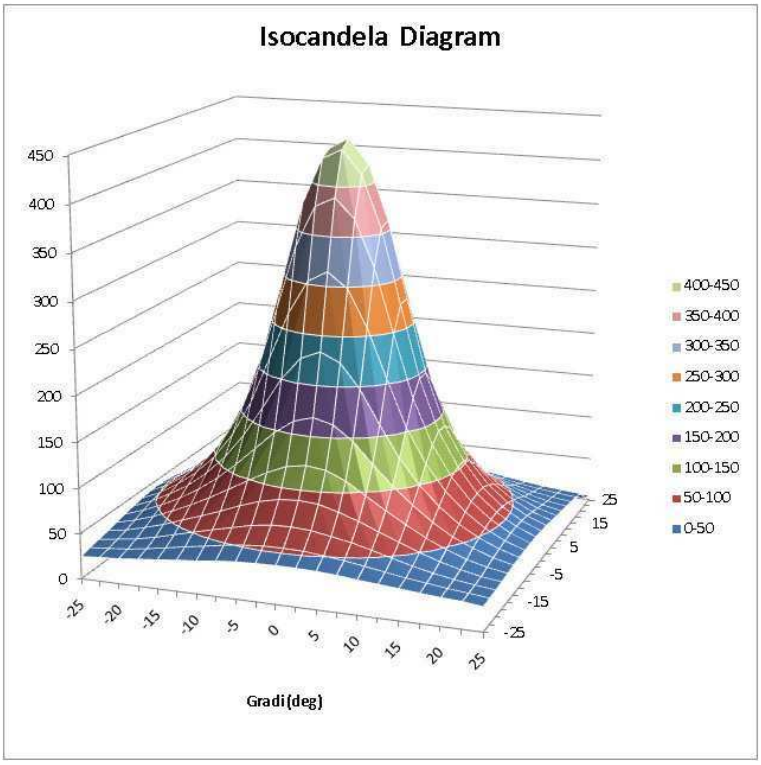

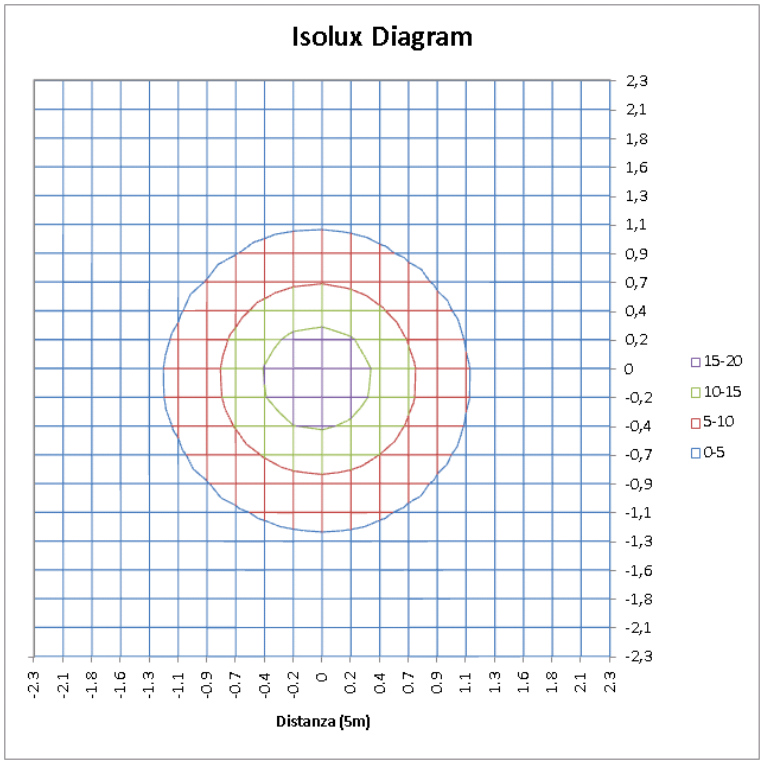

KHATOD®
OPTOELECTRONIC

CODE NUMBER: 110000000036

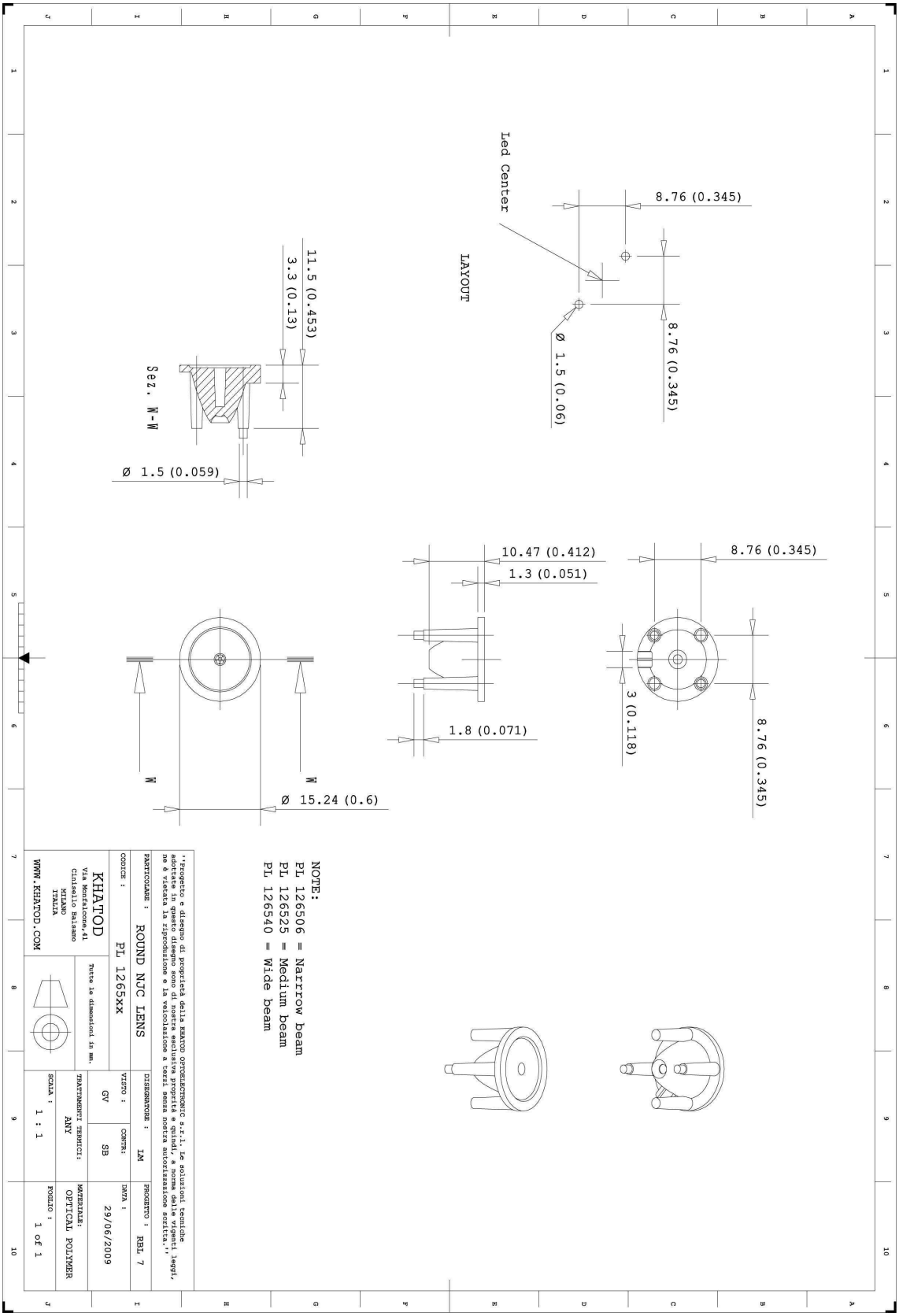

CODE NUMBER: 110000000036

Gray Scale Illuminance @ 5m Distance

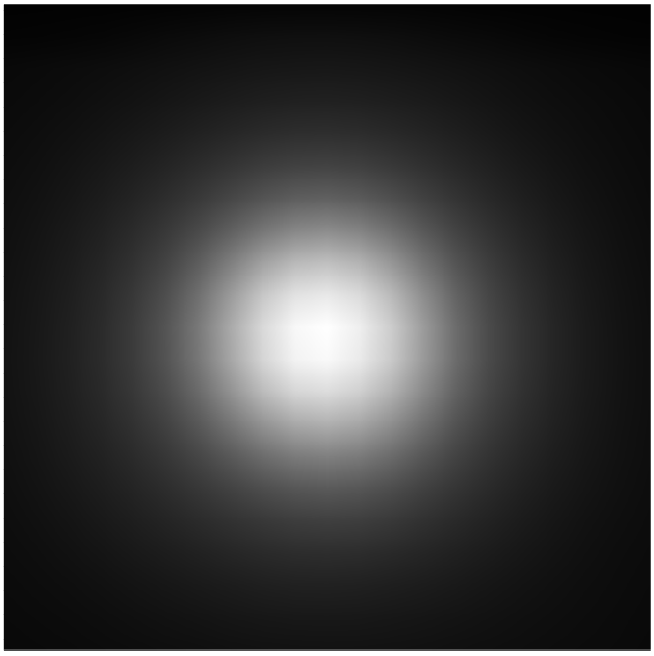

False Colours Illuminance @ 5m Distance

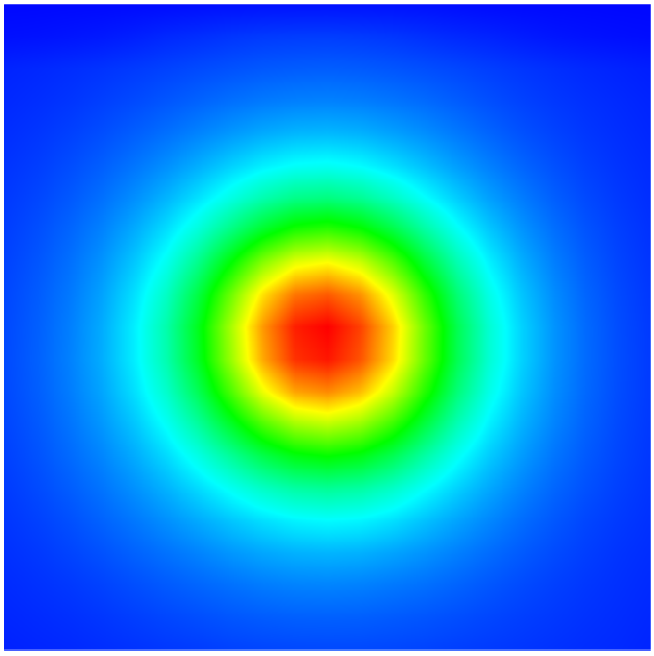

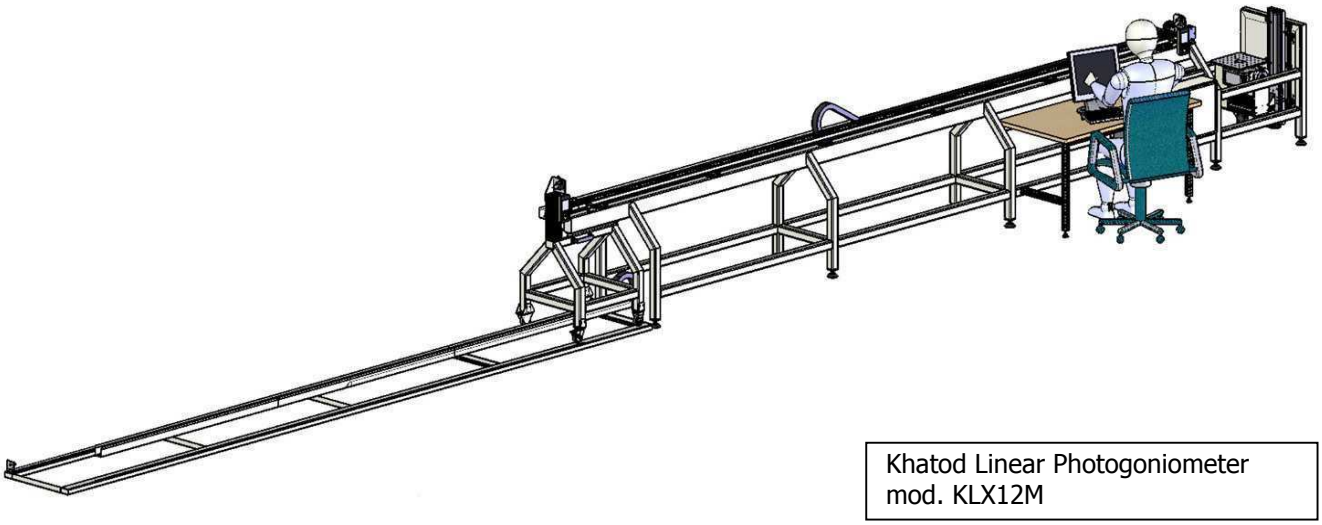

Khatod Linear Photogoniometer
mod. KLX12M

KHATOD®
OPTOELECTRONIC

Luminous Distribution Intensity Data

CODE NUMBER: 110000000036

C (deg) / γ (deg)	0°	10°	20°	30°	40°	50°	60°	70°	80°	90°	100°	110°	120°	130°	140°	150°	160°	170°	180°	190°
0°	445	445	445	445	445	445	445	445	445	445	445	445	445	445	445	445	445	445	445	445
5°	360	351	345	344	337	334	335	332	333	338	337	339	346	348	354	364	368	374	383	383
10°	197	190	187	183	178	175	176	174	173	175	177	181	186	188	195	203	208	213	220	223
15°	102	99	96	92.4	89.7	88.3	87.9	88.6	89.1	89.5	91.3	93.8	95.2	97.3	99.8	103	108	112	116	119
20°	55.8	53.9	52.7	50.9	50.1	49.8	49.7	49.5	48.9	49.3	49.8	51.5	53.1	55.4	57.8	59.7	62.2	64	66.5	69.4
25°	33.3	32.3	32.1	31.9	31.8	31.3	25.2	18.3	12.5	9.5	13	20.4	27.9	34.4	36.5	38.3	39.6	40.6	42	43.9
30°	0	0	0	0	23	10.5	0	0	0	0	0	0	0	12.2	26	0	0	0	0	0
35°	0	0	0	0	0	0	0	0	0	0	0	0	0	0	0	0	0	0	0	0
40°	0	0	0	0	0	0	0	0	0	0	0	0	0	0	0	0	0	0	0	0
45°	0	0	0	0	0	0	0	0	0	0	0	0	0	0	0	0	0	0	0	0
50°	0	0	0	0	0	0	0	0	0	0	0	0	0	0	0	0	0	0	0	0
55°	0	0	0	0	0	0	0	0	0	0	0	0	0	0	0	0	0	0	0	0
60°	0	0	0	0	0	0	0	0	0	0	0	0	0	0	0	0	0	0	0	0
65°	0	0	0	0	0	0	0	0	0	0	0	0	0	0	0	0	0	0	0	0
70°	0	0	0	0	0	0	0	0	0	0	0	0	0	0	0	0	0	0	0	0
75°	0	0	0	0	0	0	0	0	0	0	0	0	0	0	0	0	0	0	0	0
80°	0	0	0	0	0	0	0	0	0	0	0	0	0	0	0	0	0	0	0	0
85°	0	0	0	0	0	0	0	0	0	0	0	0	0	0	0	0	0	0	0	0
90°	0	0	0	0	0	0	0	0	0	0	0	0	0	0	0	0	0	0	0	0

KHATOD®
OPTOELECTRONIC

200°	210°	220°	230°	240°	250°	260°	270°	280°	290°	300°	310°	320°	330°	340°	350°
445	445	445	445	445	445	445	445	445	445	445	445	445	445	445	445
385	390	388	388	392	388	387	390	384	380	380	373	370	371	364	361
228	233	233	234	236	234	232	234	231	231	230	225	220	217	208	201
121	120	121	122	122	123	122	122	123	123	119	116	114	111	109	106
71	71.2	71.6	71.3	70.2	70.3	69.8	69.3	68.8	69.1	68.1	67.1	65.2	63	61.1	58.1
45.1	46.2	46	45.2	44.3	43.2	42.4	42	42.9	43.6	43.7	42.8	41.3	40.1	37.7	35.3
0	0	32.1	30.9	0	0	0	0	0	0	0	32.6	30.9	0	0	0
0	0	0	0	0	0	0	0	0	0	0	0	0	0	0	0
0	0	0	0	0	0	0	0	0	0	0	0	0	0	0	0
0	0	0	0	0	0	0	0	0	0	0	0	0	0	0	0
0	0	0	0	0	0	0	0	0	0	0	0	0	0	0	0
0	0	0	0	0	0	0	0	0	0	0	0	0	0	0	0
0	0	0	0	0	0	0	0	0	0	0	0	0	0	0	0
0	0	0	0	0	0	0	0	0	0	0	0	0	0	0	0
0	0	0	0	0	0	0	0	0	0	0	0	0	0	0	0
0	0	0	0	0	0	0	0	0	0	0	0	0	0	0	0
0	0	0	0	0	0	0	0	0	0	0	0	0	0	0	0
0	0	0	0	0	0	0	0	0	0	0	0	0	0	0	0

Lens characteristics

Parameter	Symbol	Rating	Unit
Lens Material	PC Optics	--	--
Holder Material	--	--	--
Operating Temperature	Topr	-40 to +120	°C
Storage Temperature	Tstg	-40 to +120	°C

Notes:

Please note that flow lines and weld lines on the external surfaces of the lenses are acceptable if the optical performance of the lens is within the specification described in the section "OPTICAL CHARACTERISTICS"

– Should you require further information, please contact Khatod for advice.
– All lens testing must be subject to identical conditions as Khatod test condition.
– Published by Khatod optoelectronic srl - All the data contained in this document are the proprety of Khatod optoelectronic srl and may change without notice.

KHATOD LENS Use And Maintenance

- DO NOT HANDLE OR INSTALL LENSES WITHOUT WEARING GLOVES, SKIN OILS MAY DAMAGE LENS OR LIGHT TRANSMISSION
- CLEAN LENSES WITH MILD SOAP AND WATER AND A SOFT CLOTH
- DO NOT USE ANY COMMERCIAL CLEANING SOLVENTS ON LENSES

Khatod SRL, Milan, Italy, manufactures lenses for LEDs. Any other use of the lens shall void our liability and warranty. The lenses are an inert component to be used in the manufacture of various products. Our warranty and liability are limited only to the manufacture of the lens. You may not modify, copy, distribute reproduce, license or alter the lens and related materials of Khatod SRL. Khatod SRL does not warrant against damages or defects arising out of the use or misuse of the products; against defects or damage arising from improper installation, or against defects in the product or in its components. No warranty of any kind, expressed or implied, is made regarding the safety of the products. The entire risk as to the quality or performance of the product is with the buyer. In no event shall Khatod SRL be liable for any direct, indirect, punitive, incidental, special, consequential damages, or any damages whatsoever arising out of or connected with the use or misuse of the product. Khatod SRL shall not have any obligation with respect to the product or any part thereof, whether based on contract, tort, strict liability or otherwise. Buyer assumes all risks and liability from use of the product. The laws of Milan, Italy govern this product warranty and liability and you hereby consent to the exclusive jurisdiction and venue of courts in Milan, Italy in all disputes arising out of or relating to the use of this product.